First Partial Exam:
Control Cabinet Restoration

Ernesto G. C. Bahena, Iker Navarrete V., Alejandro G. Padilla, J. Anderson Rivera, Uriel A. H. Barrera, Kevin A. Lara H., Orlando Contreras R., Iker E. García B., Rafael O. J. de Luna, Geovanni E. M. A., Juan J. Santillan M., Ángel D. Hernández G.,

Universidad Autónoma de Aguascalientes, Departamento de Sistemas Electrónicos
Av. Universidad, Col. Universitaria. 940, 20131 Aguascalientes, México
al396951@edu.uaa.mx, al300304@edu.uaa.mx, al308172@edu.uaa.mx, al354013@edu.uaa.mx, al346974@edu.uaa.mx, al464376@edu.uaa.mx, al348390@edu.uaa.mx, al307630@edu.uaa.mx, al332461@edu.uaa.mx, al281312@edu.uaa.mx, al300469@edu.uaa.mx, al263610@edu.uaa.mx.

Abstract.
This project describes the adaptation and restoration of an electrical control cabinet designed as a didactic tool for industrial automation training. The primary objective is to bridge the gap between theoretical knowledge and practical application by integrating essential industrial components such as PLCs, motor protection switches, contactors, and signaling devices into a modular and accessible system. The result is a versatile laboratory resource that enhances collaborative learning and prepares students for complex industrial control tasks through hands-on experience

Keywords: Control cabinet, Industrial automation, PLC, Didactic tool, Electrical wiring, Hands-on learning, Industrial safety, Restoration.

1 Introduction.

This project aims to adapt an electrical panel for the practical implementation of various PLC functions, using indicators, pushbuttons, motor protection switches, contactors, terminal blocks, and other components. The project's premise stems from the need for a didactic tool to facilitate hands-on learning in the field of industrial control. This tool not only enhances and complements the user's knowledge of electrical diagram interconnections, fostering the development of wiring skills and best practices in field safety, but also offers an accessible and modular design that facilitates the execution of tasks of varying complexity.

In this way, we intend to create a useful resource for the laboratory that promotes learning and aligns with real-world industry conditions, strengthening academic training and collaborative work.

2 Objectives.

Restore the laboratory's control cabinet to permit the students to safely engage in hands-on practice, allowing them to implement WLC designs safely.

Standardize the internal wiring and component layout to ensure full compliance with technical safety regulations, facilitating easier maintenance and providing a clear, professional-grade reference for future academic generations.

3 Procedure.

Work on this project officially began during the last week of February. To keep things moving efficiently, we split the team into four sub-groups, which allowed us to work different parts of the project simultaneously and stay on track.

The first task was the decommissioning and cleaning of the electrical cabinet. We focused on disconnecting old wiring, removing terminal blocks from the rails, and clearing out the wire ducts to ensure a clean slate for the new setup. Rather than just tossing everything out, we performed a quick quality check on the removed materials; anything in good shape was cataloged to be reused later.

With the cabinet cleared, we moved into the pre-assembly stage. This phase included:

- Door Components: Mounting the push-buttons and status indicators directly onto the cabinet door.
- Pre-wiring & Labeling: Preparing the conductor sets for integration. At this stage, identification labels were created and attached to the cables, ensuring every connection would be easy to distinguish and trace later on.
- Quality Control: To avoid complications like intermittent failures or loose connections, we ran continuity tests on every single cable before the final installation.

Inside the cabinet, we did a bit of restructuring. We reorganized the existing DIN rails and added new ones to make room for the updated hardware. This is where we mounted the core protection and distribution gear, such as terminal blocks, circuit breakers, and motor protectors.

To wrap up this phase, we set up the power distribution system, which involved securing the power supply to the cabinet chassis and completing the primary electrical feeds. We then spent time precision-cutting the wires to link the control interface (the buttons and lights) with the internal logic. Finally, we integrated the start/stop stations, implementing the necessary logic for a safe and reliable operation.

The current state of the wiring and the overall layout is shown in Figure N.

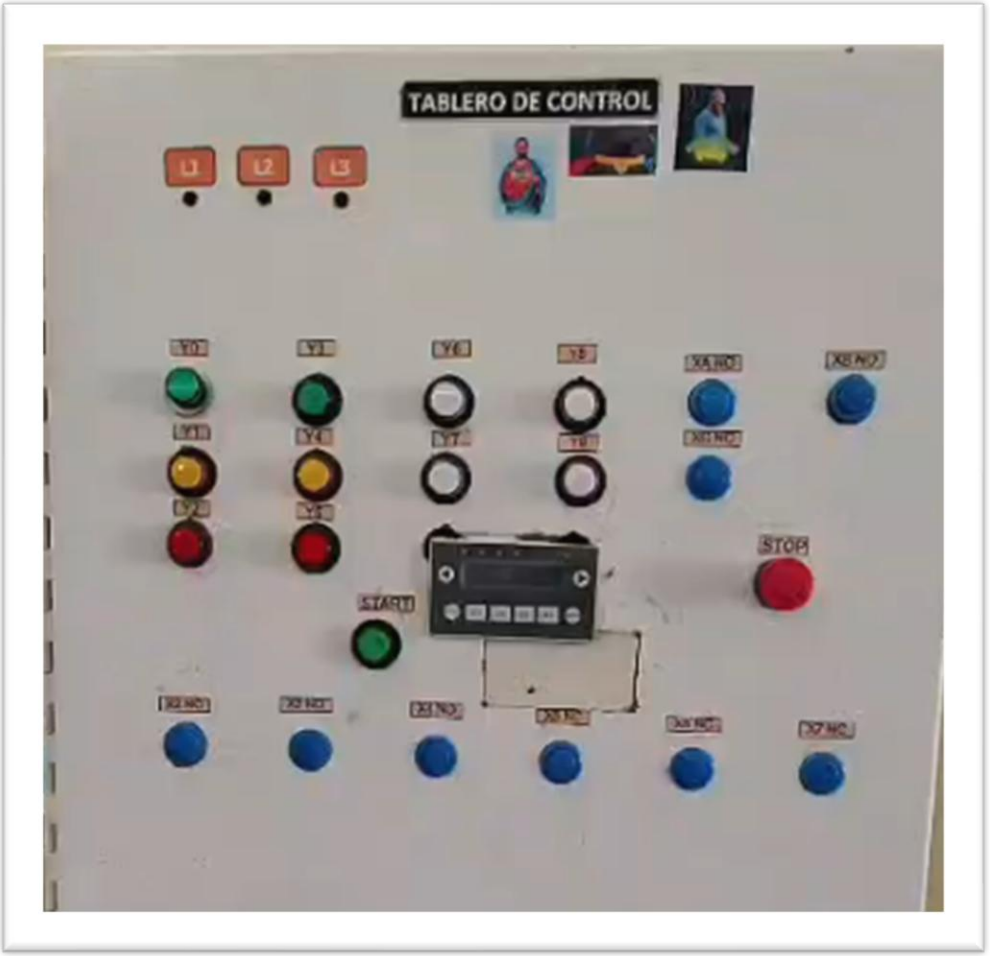

a) Front panel of the cabinet

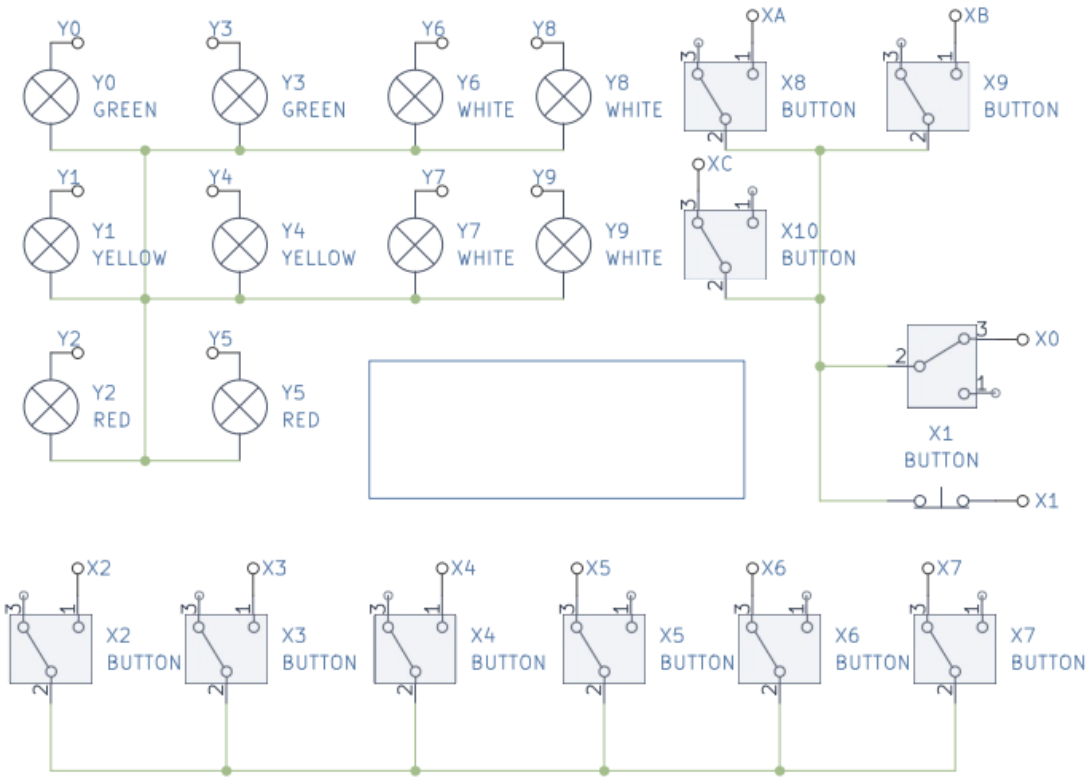

b) Electrical diagram of the front panel

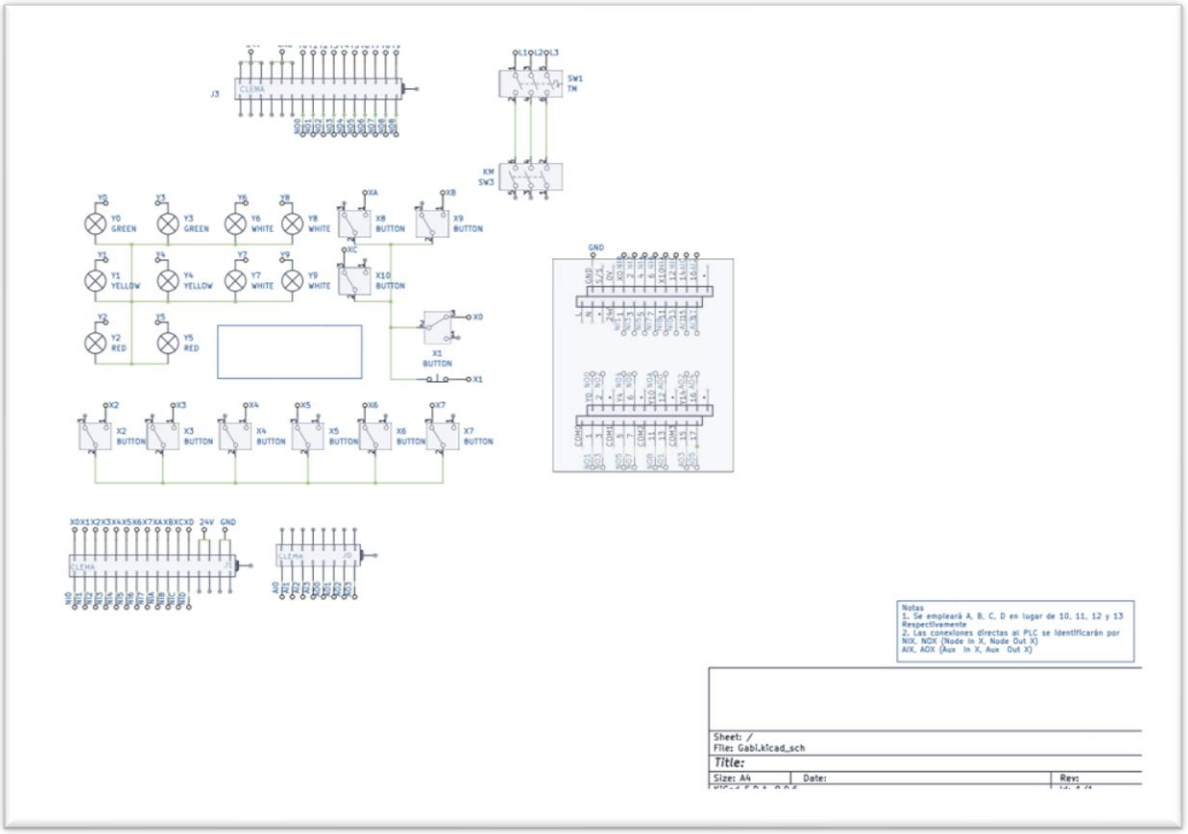

Figure N. Electrical diagram and cabinet panel juxtaposed.

4 Results.

We can initially see that the indicators are connected to corresponding pushbuttons via the necessary wiring and power interconnections. This ensures proper operation once the system is activated by the START button and can be stopped with the STOP button. Thus, we observe on our control panel that the indicators are activated by pressing or deactivating the normally open (NO) and normally closed (NC) pushbuttons, respectively as it's shown in Fig. 1.

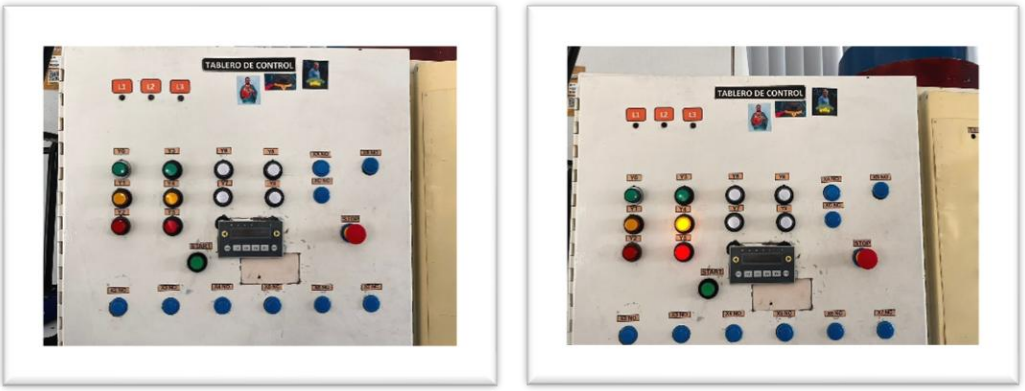

Fig. 1: Control front panel.

For the motor reversing circuit, a power diagram and a control diagram were created using the interconnections of the PLC devices following the structure of the diagram shown in Fig. 2. The components functioned correctly, utilizing the control panel elements as well.

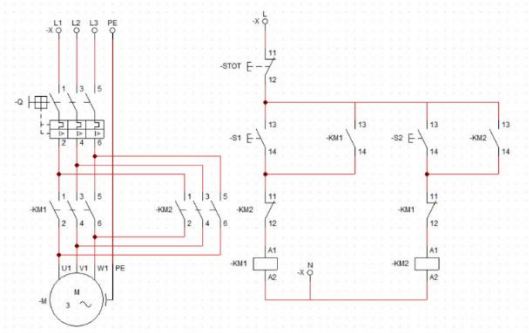

Fig. 2: Diagram connection.

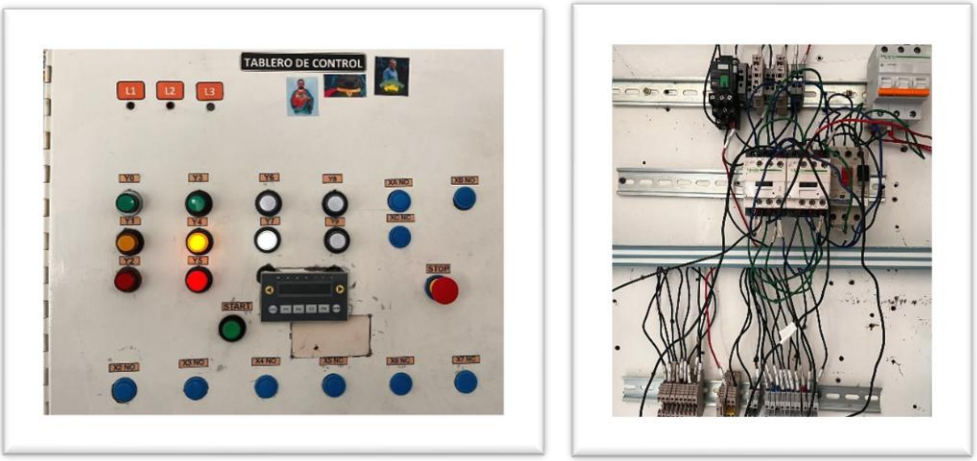

Fig. 3: Motor reversing circuit connection and function.

5 Conclusion

This exam presented us with several challenges, mainly in organization and in how we worked as a team. Without a clearly defined leader, we tried to coordinate through group agreements, which in theory gave us more freedom, but in practice sometimes created uncertainty about who should make certain decisions or follow up on tasks. At times, one or two people naturally took on that role to keep things moving, which helped maintain progress, but also made it clear that we still need to improve our coordination without relying on a central figure.

Regarding the division of work, although it was initially planned to organize it into subgroups, this structure was not always maintained. Over time, tasks were handled more flexibly by those present in the lab or available at the moment. This allowed progress in certain areas, but also meant there was not always a clear follow-up on responsibilities, which sometimes caused confusion or duplication of efforts.

Another important aspect was the start of the project, as it took us time to gain momentum as a team. This was partly because each member had other academic or personal responsibilities, so not everyone could give it the same level of priority at all times. As a result, progress was more gradual than expected, especially at the beginning when we were still organizing ourselves.

Additionally, the fact that many tasks depended on others being completed beforehand caused progress to stall at certain points. When one activity was delayed, it directly affected the rest of the team. In those situations, some members chose to help with tasks outside their direct responsibility, which helped maintain progress, but also showed that the initial distribution of work could be improved.

Finally, we believe that more individual initiative was needed at certain moments. Working without a leader made it important for each member to take greater responsibility for their part and try to make progress independently, without relying too much on external direction. Despite these challenges, the experience helped us identify areas for improvement in our team dynamics, which will be useful for future group projects.